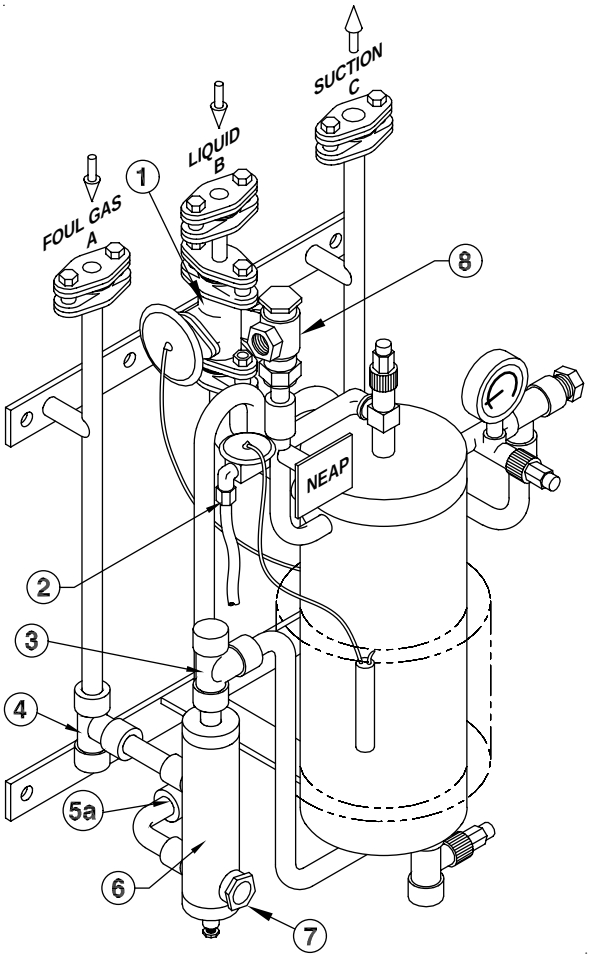

Left-Hand Side

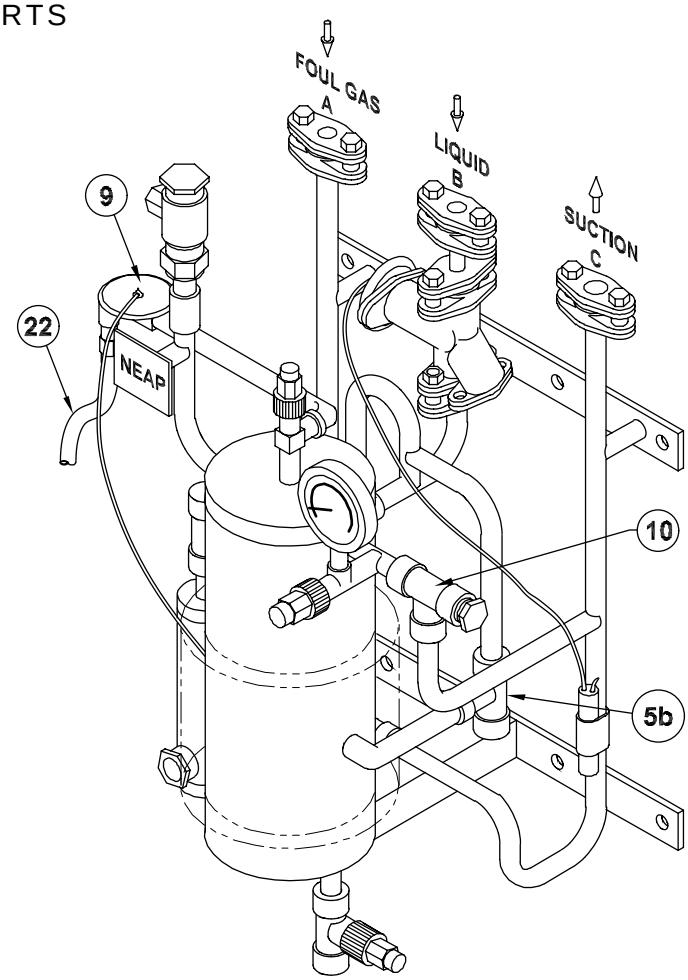

Right-Hand Side

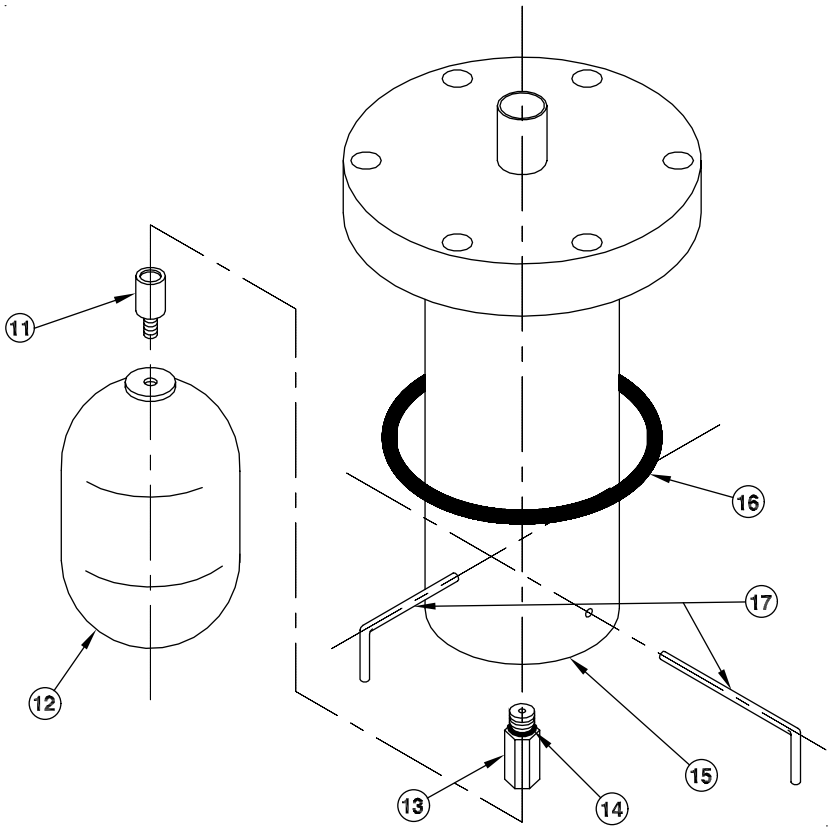

Purger Vessel Cover and Float Ball Assemblies

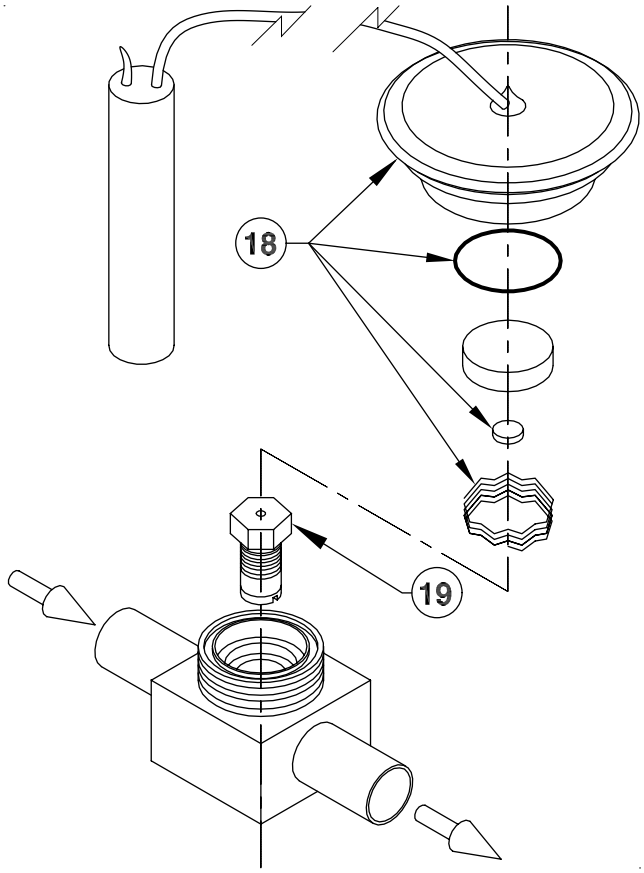

Combination Temperature/Check Valve (9)

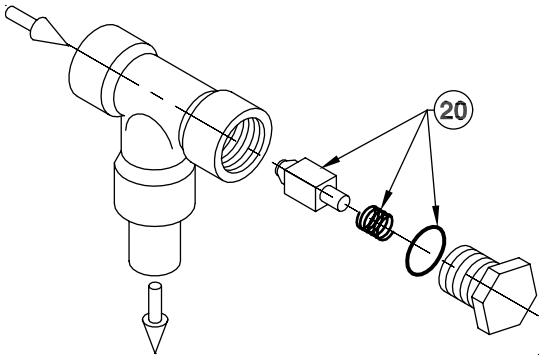

225 psid Check Valve (10)

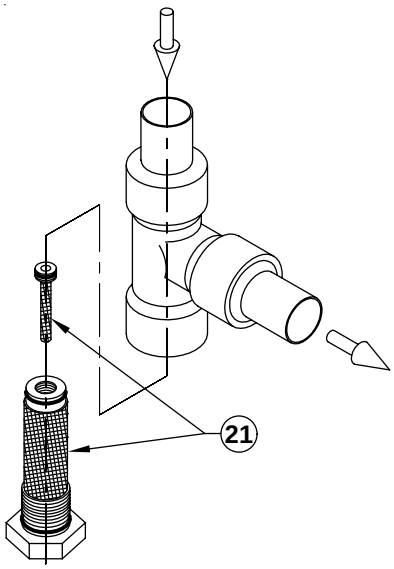

Strainer/Orifice (5a, 5b)

Item	Description	Part Number
1	Thermostatic Expansion Valve	20-2163
2	Inline Check Valve, 1psid	20-1183
3	Ball Check Valve: Ball	20-1187
4	Strainer Kit: Strainer screen and O-ring	78-1010
5a, 5b	Strainer/Orifice	N/A
6	Liquid Drainer	N/A
7	Sight Glass	N/A
8	Pressure Relief Valve, 300 psi	H5600/300
9	Combination Temperature/Check Valve	N/A
10	Check Valve, 225 psid	N/A
11	Float Ball Plunger	20-2201
12	Float Ball	77-0036
13	Float Ball Seat	20-2202
14	O-ring, Float Ball Seat	20-2166
15	Vessel Cover Assembly	N/A
16	Vessel Cover O-ring	20-2167
17	Float Ball Retaining Wires (2 per kit)	20-2173
18	Temperature Valve Assembly Kit	20-2200
19	80 psi Check Valve Assembly, Temperature Valve	20-2199
20	225 psi Check Valve Kit	20-2204
21	Screen Assembly	20-2203
22	10 feet (3 m) of Nylon Purge Gas Tubing	20-1242